# Adjustable Hockey Stick Push Rod ver. 4 - 9

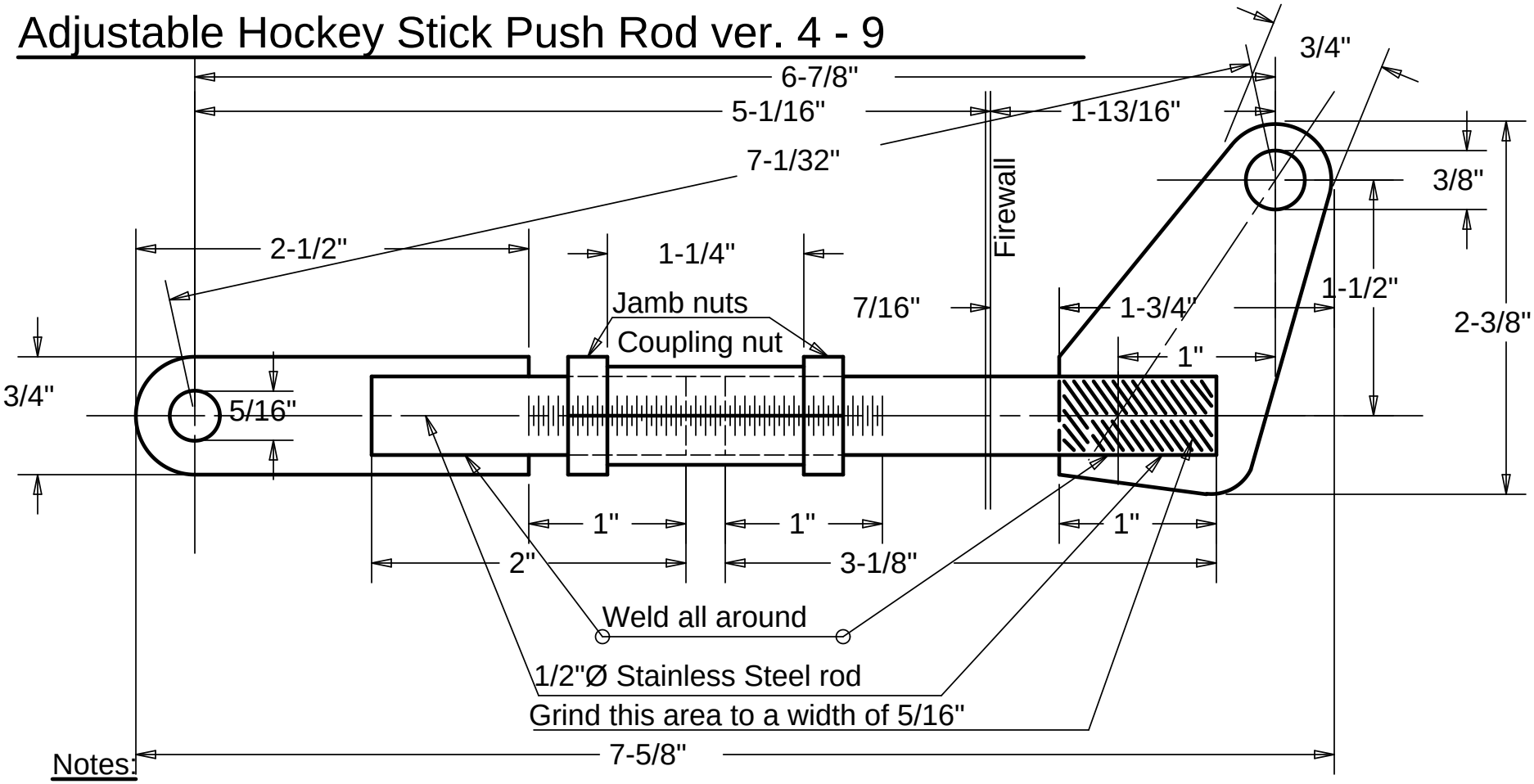


Notes:

1. Flat stock: 1/4" Stainless steel
2. Coupling nut and Jamb nuts: 1/2" - 20 UNF Stainless steel
3. Rods: 1/2" Stainless steel
4. All threads 1/2" - 20 UNF
5. Adjust the length of the push rod as required to position the pivot arms for the booster.

Drn. by: H. Prout

Rev. date: 2012 03 05 - 9

Scale: Full size

CREATED USING CADSTD LITE FREEWARE FROM WWW.CADSTD.COM. NON-COMMERCIAL USE ONLY.